G4 CC80-100 Image

G4 CC80-100 drawing

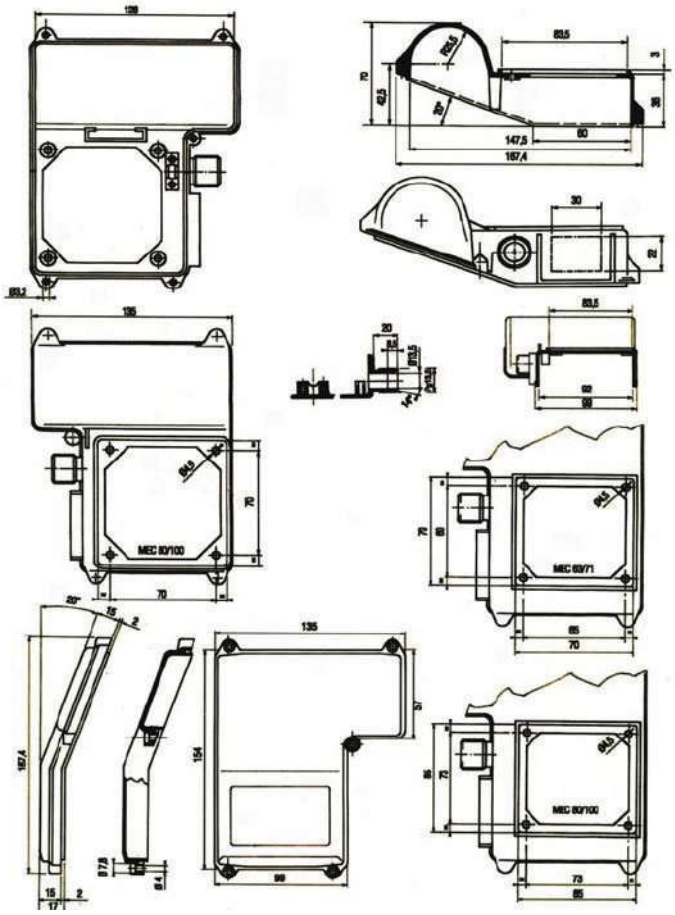

Dimensions of G4 CC-80-100

Model	Dimensions (mm) Length X Width X Height	cable tie
CC-80-100	157.4 X 135 X 70	PG 13.5